CSCE 463/612 Networks and Distributed Processing Fall 2024

Preliminaries

Dmitri Loguinov
Texas A&M University

August 20, 2024

Agenda

- Roadmap
- Syllabus
- Academic integrity
- Homework expectations
- Visual Studio
- Wrap-up

Course Roadmap

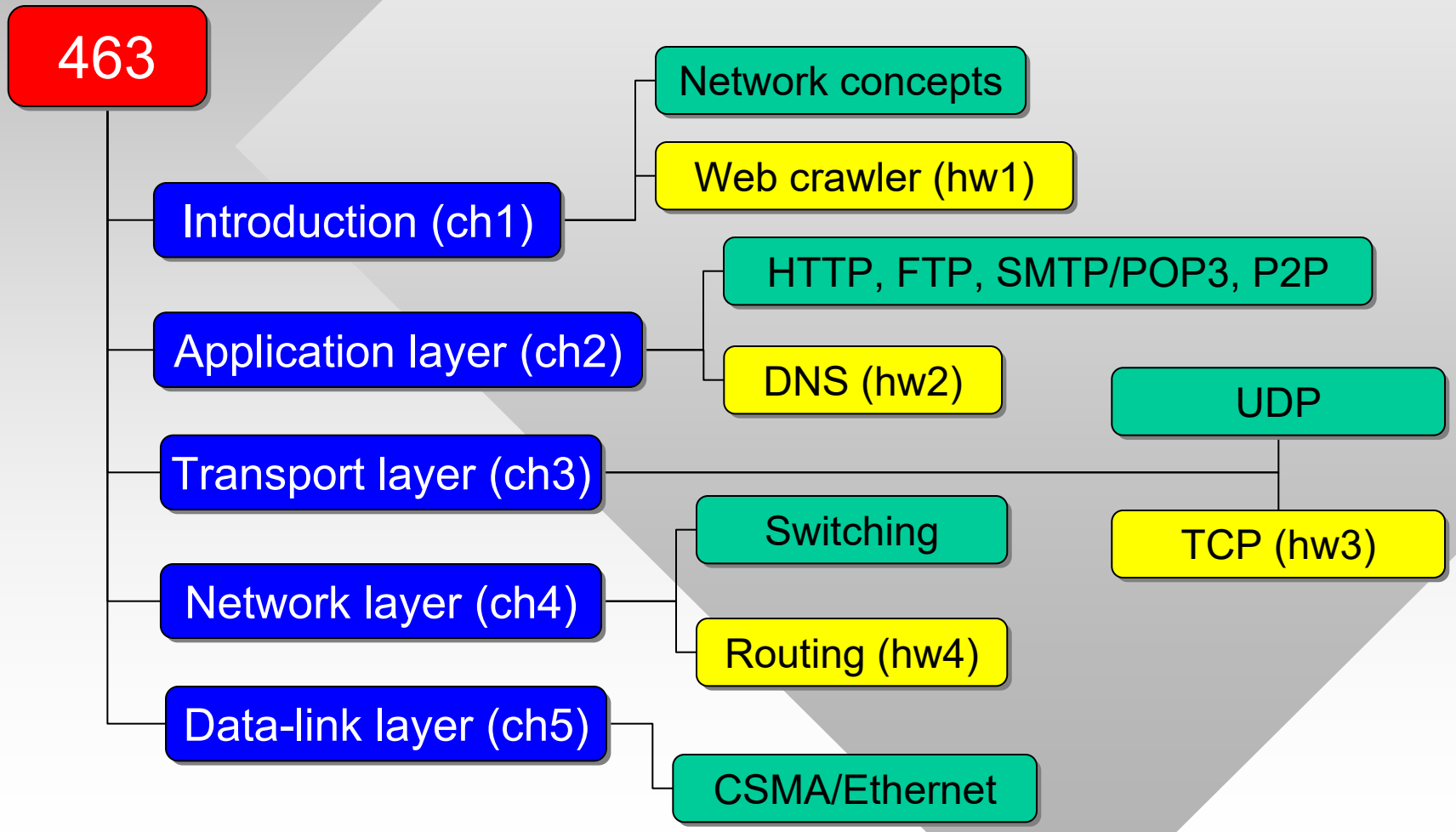

Agenda

- Roadmap
- Syllabus
- Academic integrity
- Homework expectations
- Visual Studio
- Wrap-up

Syllabus

- Instructor: Dmitri Loguinov, TR 1-2pm, 209 PETR
- TA: Arif Arman, MW 12-1pm, 211 PETR
- Main text:
  - J.F. Kurose and K.W. Ross, "Computer Networking: A Top-Down Approach," Addison-Wesley, 6th edition, 2013
- Homework submissions & grades
  - http://canvas.tamu.edu
- Slides, supporting material, and future test dates
  - http://irl.cse.tamu.edu/courses/463
- Discussion forum
  - http://piazza.com/tamu/fall2024/csce463

Syllabus 2

- Must use Visual Studio 2022 + default SDK
  - Download Community Edition for free from Microsoft https://visualstudio.microsoft.com/vs/
  - When installing, only need “Desktop Development with C++” in the set of options
  - Can use Microsoft APIs or C++11 threads/synchronization
- Prerequisites:
  - Competent C/C++ and debugging skills
  - CSCE 313: Computer Systems
    - Multi-threading and synchronization
  - CSCE 221: Data Structures and Algorithms
    - Queues, sets, hash tables, trees
- Expect heavy coding & debugging

Syllabus 3

- Homework (40% of grade):
  - 4 programming assignments
  - Each explores a different aspect of computer networks
- Exams (60% of grade):
  - Closed-book, no cheat-sheets
  - 3 quizzes (15% of final grade):
    - Problems from each chapter and system notes from course website
  - 3 midterms (45% of final grade):
    - Lecture/homework topics

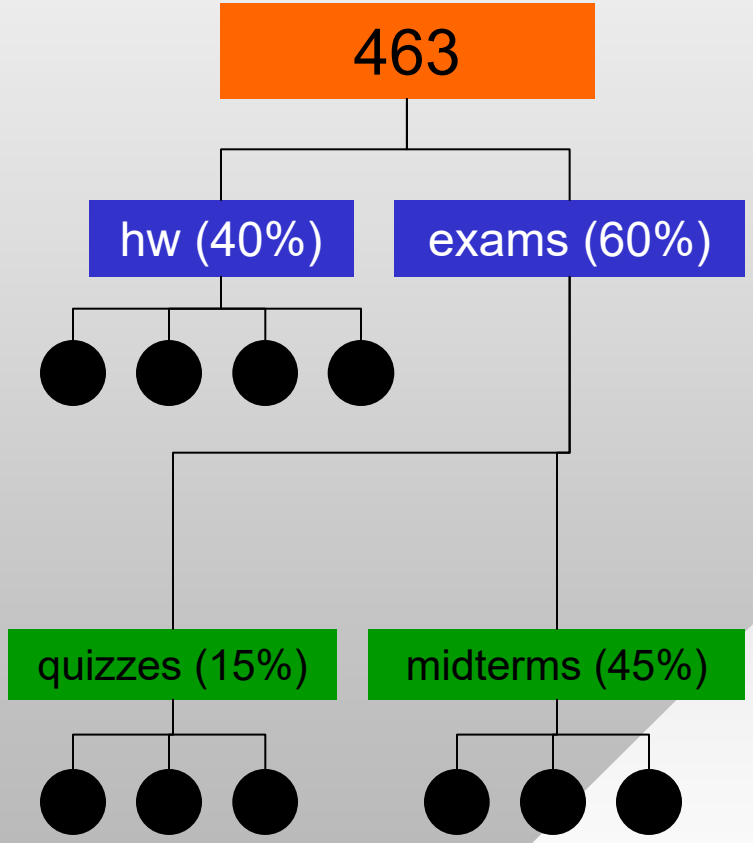

Syllabus 4

- Grade distribution
  - 90-100% (A), 80-89% (B), 70-79% (C), 60-69% (D), 0-59% (F)
- You cannot pass the class without doing homework
- Student type A: emails for every simple issue
  - How to create a project, start a program, linker errors
  - Instructor ends up googling and sending results back
- Student type B: never asks for help
  - Spends hours or days being stuck on the same problem
- Best route lies somewhere in between
  - Others might have experienced similar problems, asked about them on stackoverflow
  - Perform initial investigation, obtain insight into the issue

Syllabus 5

- If problem still unsolved, ask for help
  - Through piazza (general concepts) or email (code-specific)
  - During class, office hours
- Piazza
  - If you can, help others with their questions
- If emailing
  - Provide a clear description of the problem, where it occurs, and what you have done to debug it
- Read my tutorial on pointers, debugging, APIs
  - http://irl.cs.tamu.edu/courses/463/systems%20notes.pdf
  - Call stack, breakpoints, immediate/watch/thread window, common debugging techniques, stepping thru code

Agenda

- Roadmap
- Syllabus
- Academic integrity
- Homework expectations
- Visual Studio
- Wrap-up

Academic Integrity

Exceptions: class sample code, API documentation, interaction with TA/instructor

- No teamwork, no external help
  - All submissions must be 100% original and yours
- Student rules 20.1.2.3.5 Plagiarism
  - The appropriation of another person's ideas, processes, results, or words without giving appropriate credit
- Student rules 20.1.2.3.1 Cheating:
  - Intentionally using or attempting to use unauthorized materials, information, notes, study aids or other devices or materials in any academic exercise. *Unauthorized materials may include anything or anyone that gives a student assistance* and has not been specifically approved in advance by the instructor
- All parties involved in misconduct penalized equally
  - **F* in the class or expulsion from university**

Agenda

- Roadmap
- Syllabus
- Academic integrity
- Homework expectations
- Visual Studio
- Wrap-up

Homework

- Homework:
  - Due at 10am, 20% penalty per day (no points after 5 days)
  - Delays for personal reasons must be requested in advance
- What to submit:
  - Add a comment to the top of each cpp/h file with your full name, class, and semester
  - Create a zip containing only *.sln, *.cpp, *.h, *.vc*proj*, delete everything else (especially the hidden directory .vs)
  - *Preserve the original directory structure inside the zip*
  - Upload to canvas.tamu.edu
  - Submitted code should compile as is, release & debug

Homework 2

- Windows machines for this class
  - You can use your laptop/desktop for most tasks
  - But on some of the benchmarks, Optimum and dorms are likely to block your connections
- Alternatives
  - Azure for students ($100 credit per year)
  - Visit https://azure.microsoft.com/en-us/free/students/
  - Allows you to spin up a virtual machine (Server 2019-2022) in the cloud, run your code over Remote Desktop
- Department Windows servers (need TAMU VPN)
  - ts.cse.tamu.edu and ts2.cse.tamu.edu
  - Use Remote Desktop to access them (username AUTH\tamuID)

Agenda

- Roadmap
- Syllabus
- Academic integrity
- Homework expectations
- Visual Studio
- Wrap-up

Wrap-up

- Homework #1 is due in three parts:
  - Part 1 (8/27): load a single page
  - Part 2 (9/3): crawl a list of pages with one thread
  - Part 3 (9/17): multi-threaded crawler & report
- Suggestions before next class:
  - Read my programming tutorial and hw1p1
  - Formulate questions about them, ask me next time
  - Experiment with VS 2022